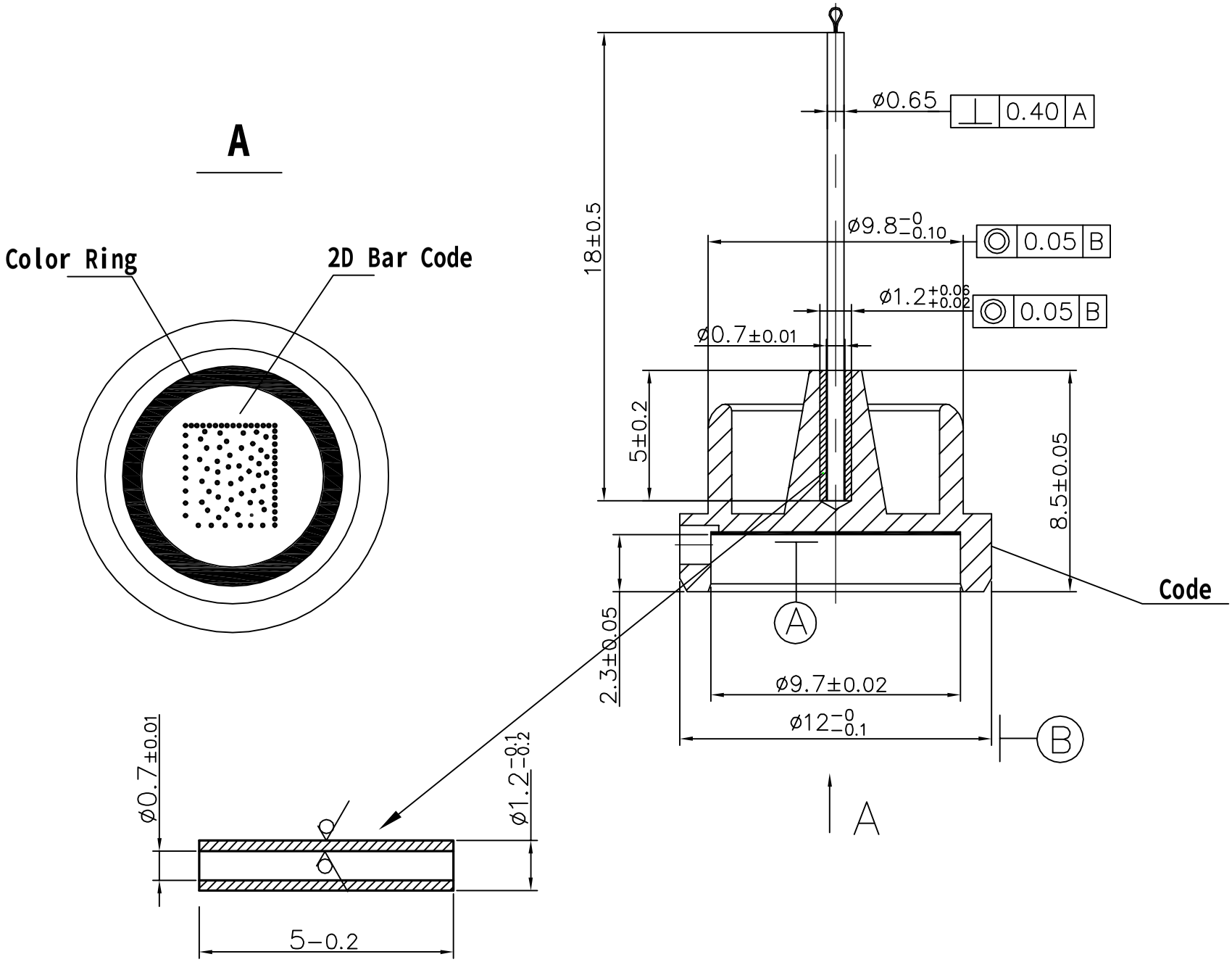
A
Color Ring
2D Bar Code
18±0.5
ø0.65
0.40 A
ø9.8 −0 −0.10
0.05 B
ø1.2 +0.06 +0.02
0.05 B
ø0.7±0.01
5±0.2
8.5±0.05
Code
A
2.3±0.05
ø9.7±0.02
ø12 −0 −0.1
B
A
ø0.7±0.01
ø1.2 −0.1 −0.2
5−0.2